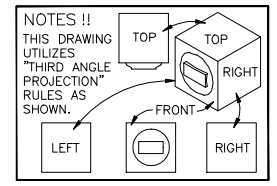

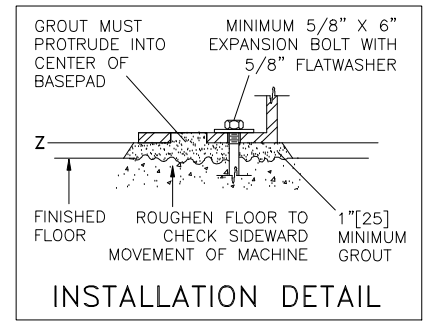

INSTALLATION DETAIL

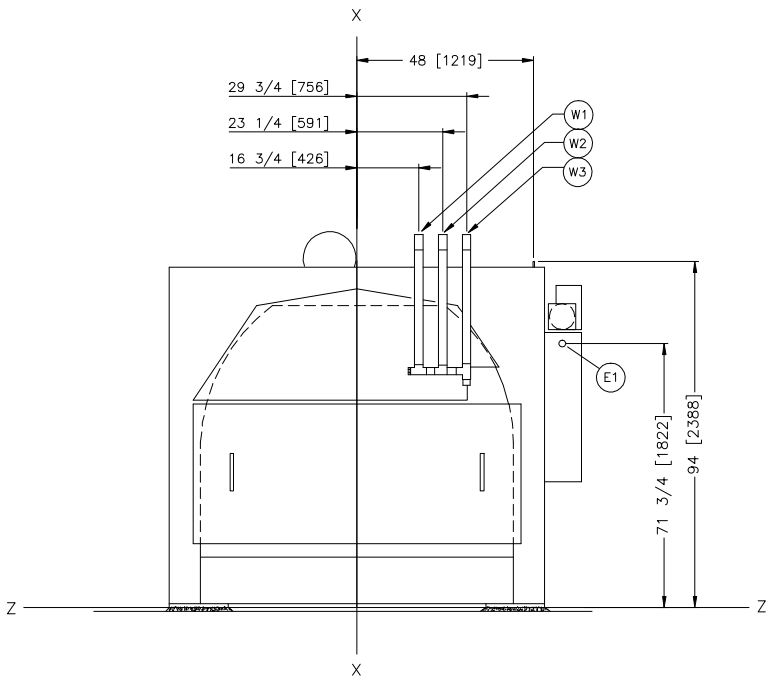

REAR VIEW

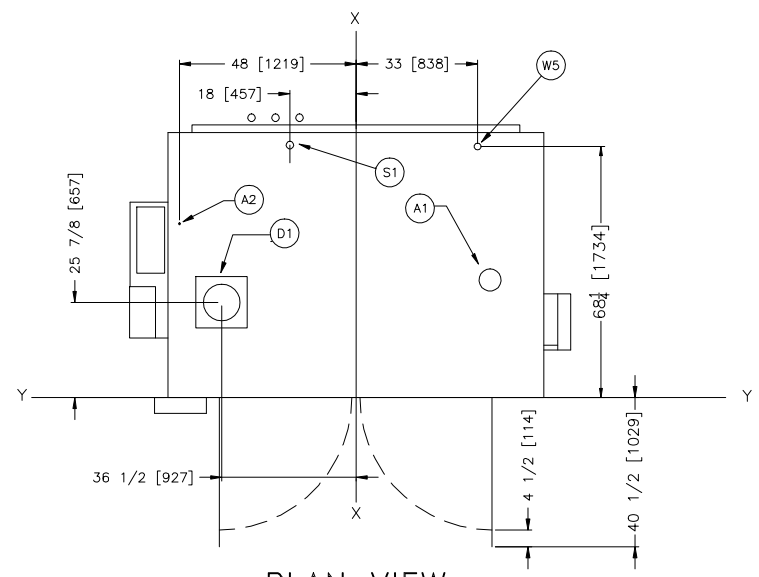

PLAN VIEW

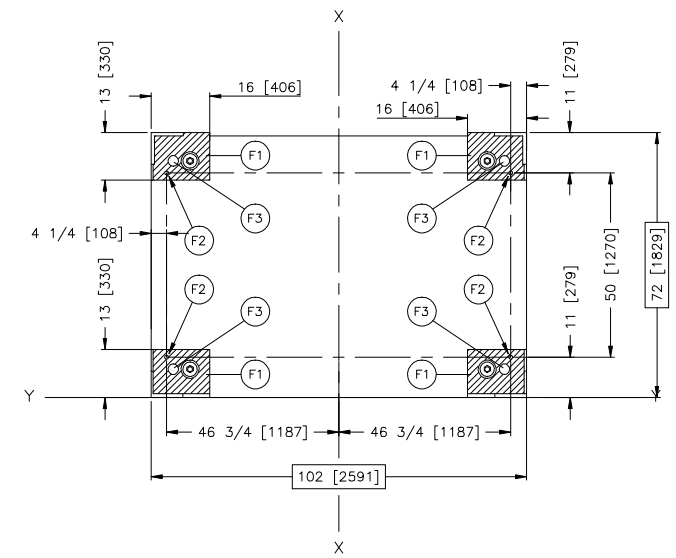

FOUNDATION PLAN VIEW

ITEM	LEGEND
W4	HOT WATER CONNECTION FOR SUPPLY INJECTOR 1"NPT
W3	HOT WATER INLET CONNECTION 2" NPT
W2	COLD WATER INLET CONNECTION 2" NPT
W1	THIRD WATER INLET CONNECTION 2" NPT
S1	1-1/4" NPT STEAM SUPPLY CONNECTION
P2	PERISTALTIC SUPPLY CONNECTION
P1	SOAP CHUTE
F3	GROUT HOLES
F2	(4) 1 1/16" DIAMETER ANCHOR BOLT HOLES, USE MINIMUM
	5/8" X 6" BOLTS MINIMUM. (1) BOLT PER PAD MINIMUM.
F1	FOUNDATION BASE PADS, 4 PLACES
E4	MICROPROCESSOR MKVI CONTROL PANEL
E3	MICROPROCESSOR BOX
E2	HIGH VOLTAGE CONTROL BOXES
E1	MAIN ELECTRICAL CONNECTION
D2	SINGLE DRAIN TROUGH
D1	DRAIN 10" DIAMETER DRAIN VALVE
A2	COMPRESSED AIR INLET 1/4 NPT
A1	VENT 6" DIAMETER

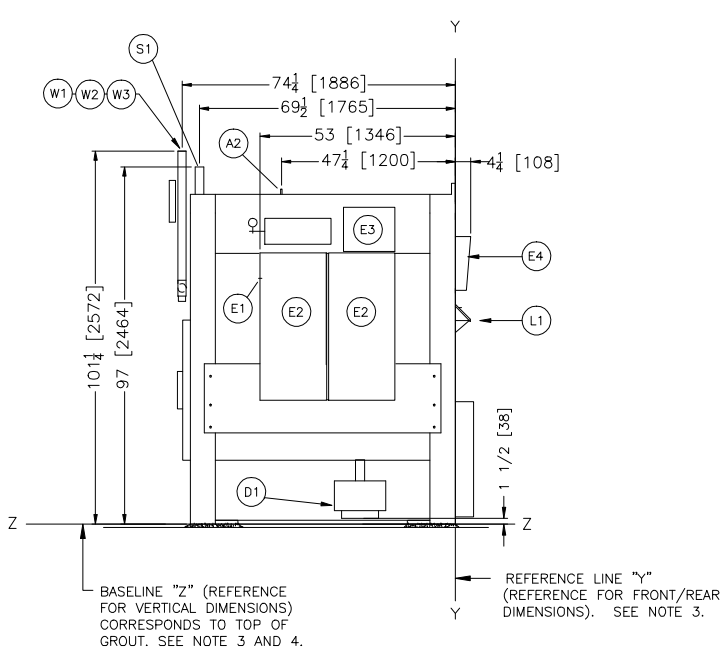

LEFT VIEW

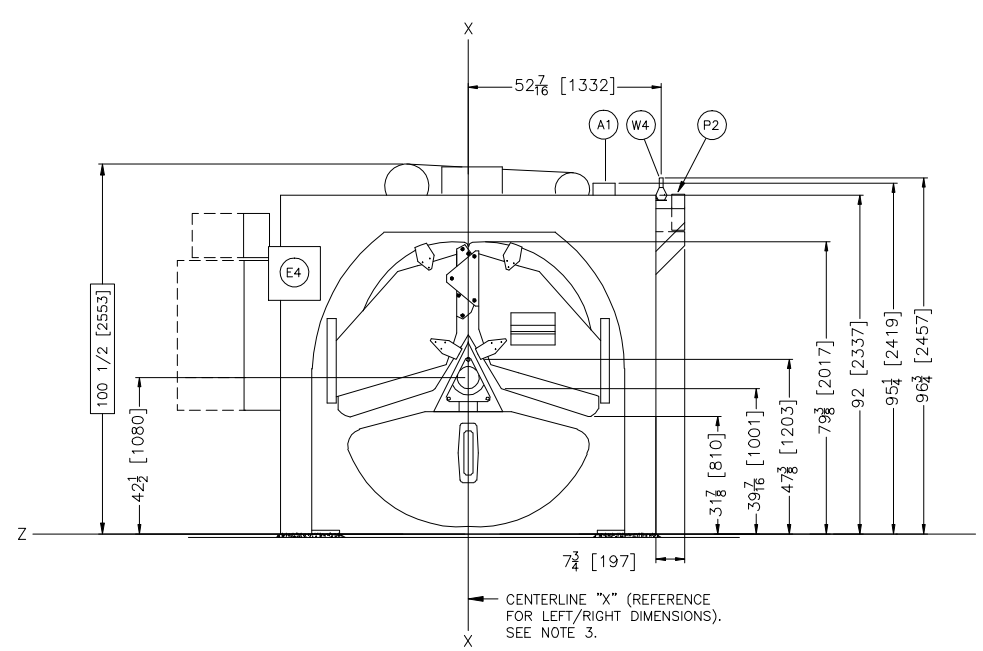

FRONT VIEW

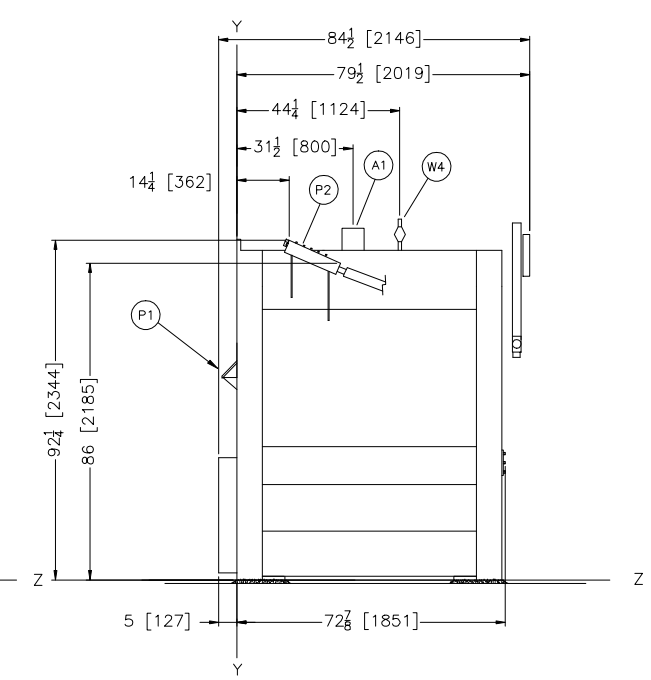

RIGHT VIEW

NOTES

11 "STEAM HAMMER", CAUSED BY WET STEAM OR CONDENSATION, MAY BE PREVENTED BY INSTALLING A TRAP IMMEDIATELY BEFORE THE STEAM VALVE.

10 DO NOT PRE PIPE CLOSER THAN 60" [1524]

9 DRAIN VALVE MAY MOVE ± 3 (76) IN ANY DIRECTION DURING OPERATION AND MUST NOT BE RIGIDLY CONNECTED TO DRAIN.

8 SHADED AREAS ARE BASE PLATES WHICH MUST BE CONTINOUSLY SUPPORTED ON 1" THICK GROUT.

7 SHIM TO LEVEL THE MACHINE AND ALLOW FOR 1" [25] MINIMUM GROUT. ANCHOR WITH ONE ANCHOR BOLT PER PAD, MINIMUM. USE 5/8" X 6" BOLTS, MINIMUM. SEE INSTALLATION MAINTENANCE MANUAL FOR FURTHER INSTRUCTIONS.

6 AS OF THIS WRITING, THE MINIMUM CLEARANCE REQUIRED BY U.S. NATIONAL ELECTRIC CODES, FROM ELECTRIC BOX TO ANY OBJECT IS:
36 [914] IF OBJECT IS AN UNGROUNDED (INSULATED) WALL.
42 [1067] IF OBJECT IS A GROUNDED WALL (ie. BARE CONCRETE, BRICK, ETC.)
48 [1209] IF OBJECT IS ANY LIVE PART.
CHECK LOCAL ELECTRIC CODES FOR FURTHER RESTRICTIONS.

5 CUSTOMER TO SUPPLY CIRCUIT BREAKER OR FUSED BRANCH CIRCUIT DISCONNECT (SAFETY) SWITCHES WITH LAG TYPE FUSES FROM POWER SOURCE TO MACHINE. A SEPARATE GROUND WIRE MUST BE CONNECTED FROM DISCONNECT TO EQUIPMENT.

4 BASELINE "Z" IS THE SAME FOR ALL MILNOR MACHINES AND IS SHOWN ON ALL DIMENSIONAL DRAWINGS. THE DISTANCE BETWEEN BASELINE "Z" AND THE FINISHED FLOOR MAY VARY (WITH CHANGES IN FLOOR HEIGHT) AS REQUIRED TO INSURE THAT BASELINE "Z" IS HORIZONTAL AND ALL COMPONENTS REQUIRING GROUT ARE SET ON A MINIMUM 1" [25] THICK GROUT BED.

3 USE REFERENCE LINES "X", "Y", AND "Z" TO LOCATE ALL SERVICE CONNECTIONS.

2 NUMBERS IN BRACKETS [] DENOTE DIMENSIONS IN MILLIMETERS.

1 ALL DIMENSIONS SHOWN ARE APPROXIMATE, SUBJECT TO NORMAL MANUFACTURING TOLERANCES, AND TO OCCASIONAL CHANGES WITHOUT NOTICE THROUGH REDESIGN AND/OR RELOCATION OF COMPONENTS, ETC. DO NOT USE FOR CONSTRUCTION UNLESS CERTIFIED, AND IN NO EVENT PRE-PIPE CLOSER THAN FIVE FEET FROM MACHINE. FACTORY MUST BE CONSULTED FOR DIMENSIONS IF MACHINE IS TO BE MOVED THROUGH NARROW OR LOW CORRIDORS OR OPENINGS.

ATTENTION

MOST REGULATORY AUTHORITIES (INCLUDING OSHA IN THE USA) HOLD THE OWNER/USER ULTIMATELY RESPONSIBLE TO MAINTAIN A SAFE WORKING ENVIRONMENT. ACCORDINGLY, THE OWNER/USER MUST RECOGNIZE ALL FORESEEABLE SAFETY HAZARDS, FURNISH SAFETY INSTRUCTIONS AND GUIDANCE TO ALL PERSONNEL WHO MAY COME IN CONTACT WITH THE INSTALLATION, AND PROVIDE ALL NECESSARY ADDITIONAL SAFETY GUARDS, FENCES, RESTRAINTS, DEVICES, ETC., NOT FURNISHED BY THE EQUIPMENT MANUFACTURER OR VENDOR.

ATTENTION

THE FLOOR AND/OR OTHER SUPPORT COMPONENTS MUST HAVE SUFFICIENT STRENGTH (AND RIGIDITY WITH DUE CONSIDERATION FOR NATURAL OR RESONANT FREQUENCY THEREOF) TO WITHSTAND THE FULLY LOADED WEIGHT OF THE MACHINE INCLUDING THE GOODS, THE WATER, AND ANY REPEATED SINUSOIDAL (ROTATING) FORCES GENERATED DURING ITS OPERATION. WRITE THE FACTORY FOR ADDITIONAL MACHINE DATA FOR USE BY A COMPETENT SOIL AND/OR STRUCTURAL ENGINEER.

72044WP2

DM 0 0.5M 1M
INCHES 0 12 24 36

DWG# BD7244W2AE
2007463D

PELLERIN MILNOR CORPORATION
P.O. Box 400 Kenner, LA 70063, USA, Phone 504/467-9591,
FAX 504/469-1849, Email: mktg@milnor.com